

Hand pallet truck

AM 22 SH / 22 NH

Lift height: 122 mm / Load capacity: 2200 kg

JUNGHEINRICH

AM 22 SH / 22 NH

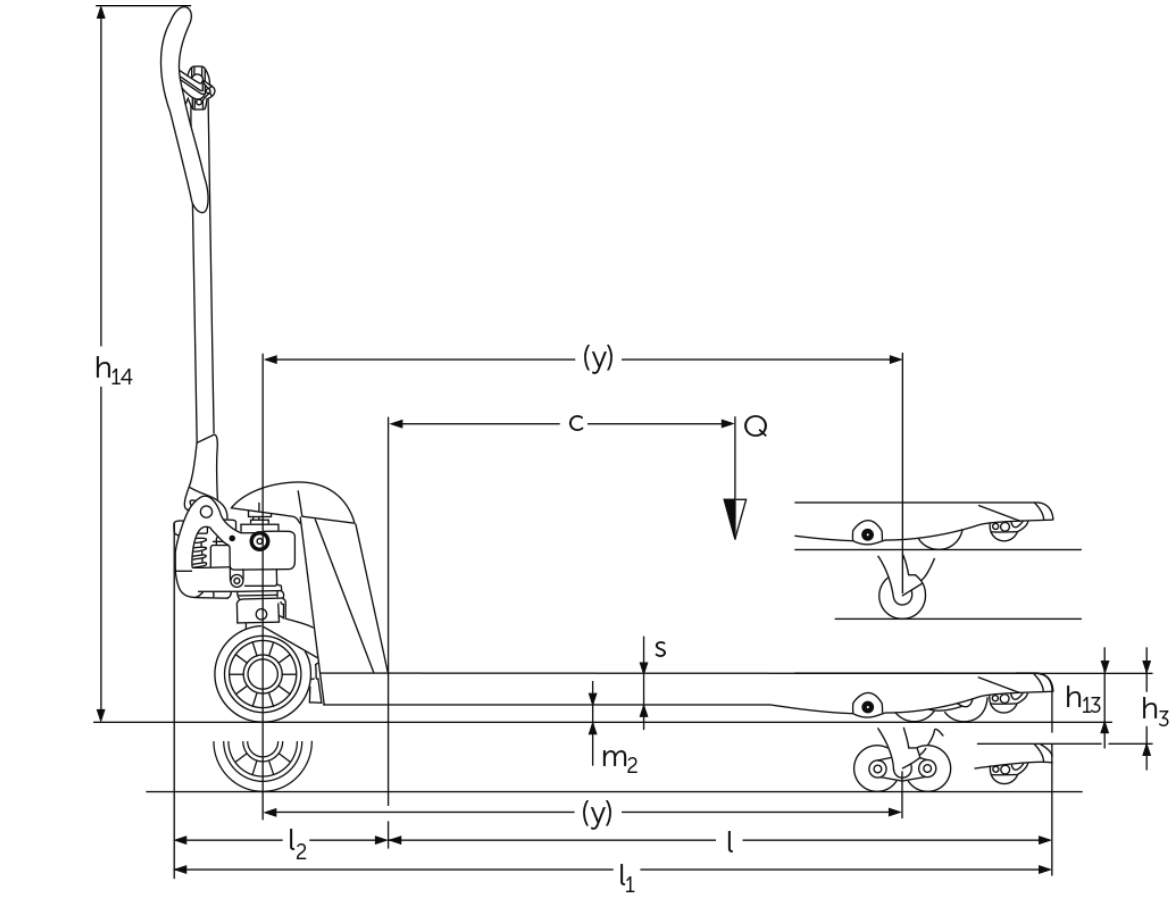
h14
(y)
c
Q
s
m2
h13
h3
(y)
l2
l
l1

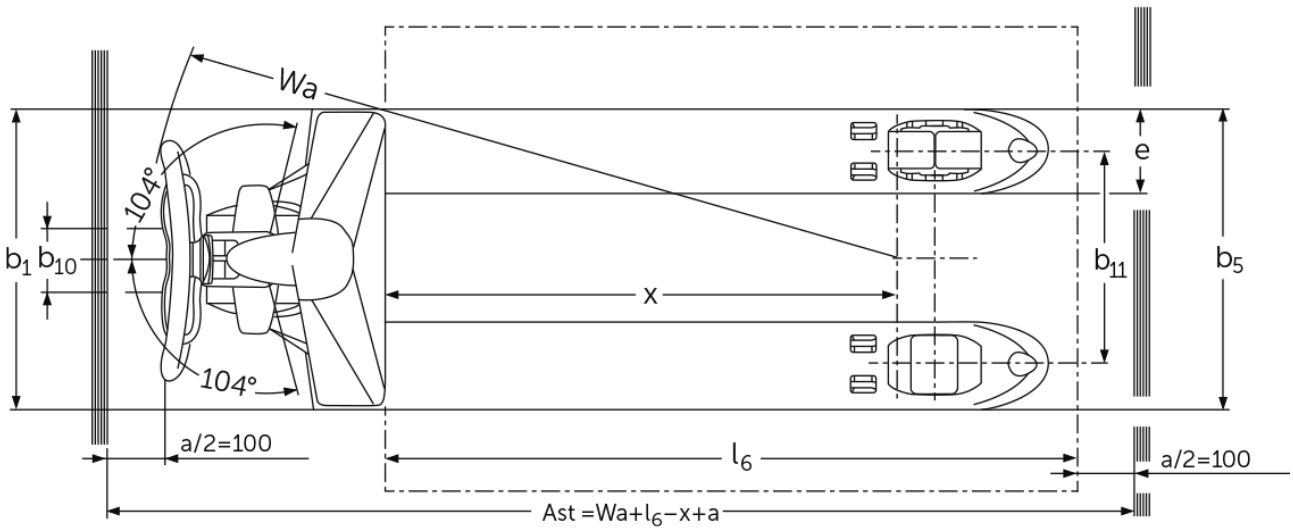
Wa
104°
104°
b1
b10
x
e
b11
b5
a/2=100
l6
a/2=100
Ast =Wa+l6−x+a

VDI table

Stand-on: 12/2024

Characteristic	1.1	Manufacturer (abbreviated description)			Jungheinrich											
	1.2	Manufacturer's type designation			**AM 22 NH**											
	1.3	Drive			Manual											
	1.4	Operation			Manual											
	1.5	Load capacity/load	Q	kg	2200							1500	1000	500	2200	
	1.6	Load centre distance	c	mm	300	400	500	600			700	800	900	1200	500	
	1.9	Wheelbase	y	mm	560	755	910	1110			1320	1560	1860	2360	910	
Weights	2.1	tare weight		kg	50	52	56	60		61	70	82		90	59	
Wheels/suspension system	3.1	Tyres			C-BV											
	3.2	Tyre size, front			Ø 170x50											
	3.3	Tyre size, rear			Ø 82x96											
	3.5	Wheels, number front/back (x=driven)			2/4											
	3.6	Tread width, front	b10	mm	109											
	3.7	Tread width, rear	b11	mm	370											
Basic dimensions	4.4	Lift (h3)	h3	mm	122											
	4.9	Height of tiller handle in drive position min./max.	h14	mm	359 / 1237											
	4.14	Stand height, elevated	h12	mm	205											
	4.15	Height, lowered	h13	mm	83											
	4.19	Overall length	l1	mm	973	1168	1323	1523			1733	1973	2273	2773	1323	
	4.20	Length including fork shank	l2	mm	373											
	4.21.1	Overall width	b1	mm	520										680	
	4.22	Fork dimensions	s/e/l	mm	53 x 150 x 600	53 x 150 x 795	53 x 150 x 950	53 x 150 x 1150		53 x 150 x 1207	53 x 150 x 1360	53 x 150 x 1600	53 x 150 x 1900	53 x 150 x 2400	53 x 150 x 950	
	4.25	Width across forks	b5	mm	520										680	
	4.32	Ground clearance centre of wheelbase	m2	mm	30											
	4.34.1	Aisle width (pallet 1000x1200 sideways)	Ast	mm	1584			1734			1933	2173	2473	2973	1584	
	4.34.2	Aisle width (pallet 800x1200 length)	Ast	mm	1784						1933	2173	2473	2973	1784	
	4.35	Turning radius	Wa	mm	724	919	1074	1274			1484	1724	2024	2524	1074	
Performance data	5.3	Lowering speed laden/unladen		m/s	0.09 / 0.02											

- This data sheet according to VDI guideline 2198 only states the technical values of the standard truck. Different tyres, other masts, additional equipment etc. may result in different values.

Characteristic	1.1	Manufacturer (abbreviated description)		Jungheinrich	
	1.2	Manufacturer's type designation		**AM 22 NH**	**AM 22 SH**
	1.3	Drive		Manual	

	1.4	Operation			Manual								
	1.5	Load capacity/load	Q	kg	2200				1500	1000	500	2200	
	1.6	Load centre distance	c	mm	600	400	500	600	800	900	1200	500	
	1.9	Wheelbase	y	mm	1110	755	910	1110	1560	1860	2360	910	
Weights	2.1	tare weight		kg	63	52	56	60	82		90	59	
Wheels/suspension system	3.1	Tyres			C-BV								
	3.2	Tyre size, front			Ø 170x50								
	3.3	Tyre size, rear			Ø 82x96								
	3.5	Wheels, number front/back (x=driven)			2/4								
	3.6	Tread width, front	b10	mm	109								
	3.7	Tread width, rear	b11	mm	370								
Basic dimensions	4.4	Lift (h3)	h3	mm	122								
	4.9	Height of tiller handle in drive position min./max.	h14	mm	359 / 1237								
	4.14	Stand height, elevated	h12	mm	205								
	4.15	Height, lowered	h13	mm	83								
	4.19	Overall length	l1	mm	1523	1168	1323	1523	1973	2273	2773	1323	
	4.20	Length including fork shank	l2	mm	373								
	4.21.1	Overall width	b1	mm	680	520						680	
	4.22	Fork dimensions	s/ e/l	mm	53 x 150 x 1150	53 x 150 x 795	53 x 150 x 950	53 x 150 x 1150	53 x 150 x 1600	53 x 150 x 1900	53 x 150 x 2400	53 x 150 x 950	
	4.25	Width across forks	b5	mm	680	520						680	
	4.32	Ground clearance centre of wheelbase	m2	mm	30								
	4.34.1	Aisle width (pallet 1000x1200 sideways)	Ast	mm	1734	1584		1734	2173	2473	2973	1584	
	4.34.2	Aisle width (pallet 800x1200 length)	Ast	mm	1784				2173	2473	2973	1784	
	4.35	Turning radius	Wa	mm	1274	919	1074	1274	1724	2024	2524	1074	
Performance data	5.3	Lowering speed laden/unladen		m/s	0.09 / 0.02								

- This data sheet according to VDI guideline 2198 only states the technical values of the standard truck. Different tyres, other masts, additional equipment etc. may result in different values.

Note. The tables do not represent all tyre variants. Not all tyre variants are available for all fork lengths.
Available tyres:
Steering wheels: N = nylon, C = rubber, V = polyurethane.
Load rollers: GN = single nylon, GV = single polyurethane, BN = tandem nylon, BV = tandem polyurethane.

The German production facilities in Norderstedt, Moosburg and Landsberg are certified as well as our Genuine Parts Center in Kaltenkirchen.

ISO 9001
ISO 14001

Jungheinrich fork lift trucks meet European safety requirements.

CE

JUNGHEINRICH